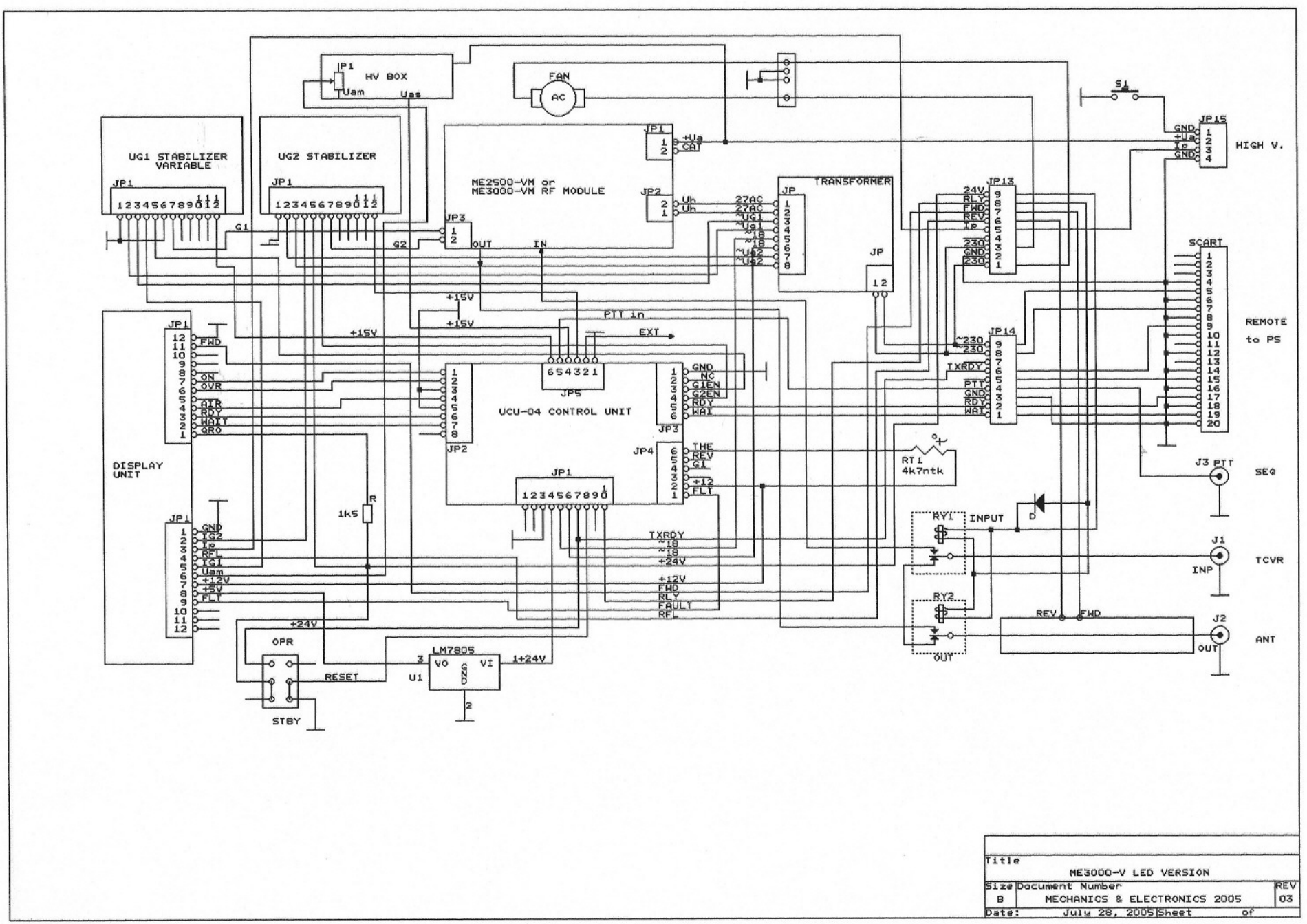

Title	ME3000-V LED VERSION	
Size B	Document Number MECHANICS & ELECTRONICS 2005	REV 03
Date: July 28, 2005	Sheet of	